CLASS 1 INC.
Building Better Healthcare™

Zone Valve Alarm Combination Systems Installation and Operating Manual

Ver. 2012 - Rev. 1004

Class 1 Inc.

design | manufacture | installation | service

world class innovation

Call us for your next project.

Class 1 Inc. | 565 Boxwood Drive | Cambridge, ON | N3E 1A5 | T: 1 (800) 242 9723 | class1inc.com

CLASS 1 INC.
Building Better Healthcare™

Operator's Manual

Zone Valve Alarm Combination Systems

Table of Contents

Table of Contents Continued

Technical Assistance: 800-242-9723 or 519-650-2355

CLASS 1 INC.
Building Better Healthcare™

Operator's Manual

Zone Valve Alarm Combination Systems

Introduction

The Class 1 Inc. zone valve alarm system monitors the status of the medical gas supply and provides audible and visual indicators. The alarm can be used in conjunction with the Class1 Inc. T-Net system to monitor the status of all T-Net equipped alarm and manifold systems on a PC. The Class1 Inc. alarm system monitors the status of the medical gas sources in accordance with CSA Z7396.1.

Features and Benefits

Microprocessor controlled

State of the art maintenance free electronics provide excellent reliability.

Easy to program

Single person adjustable digital pressure display

Self test program – alarm code display

LED display reveals the nature of the malfunction and reduces maintenance time.

Three year PC board warranty

A quality product you can buy with confidence.

Transient signal filter

Prevents or reduces nuisance (false) alarms signals (less than 0.7 seconds) created by EMI /RFI interference.

Audio & visual signal indicators

Audible alarm and visual display of both normal and abnormal status of each signal monitored assures prompt and informative indication of a problem.

Easy to install and service

Hinged door for easy accessibility.

Dry remote signal contacts (high & low) for each gas module

Dry contacts are provided so that both the high & low line pressure alarms may be remotely wired to a remote or master alarm.

Digitized transducers

Extremely resistant to RFI.

Programmable gas module high and low set points

Pre-programmed from factory at 60/40 psig for 50 psig delivery pressure gases, 220/140 for N2 and 12 in Hg for Medical Vacuum & Scavengining. Programmable in 0.5 psig or In Hg increments from 0.5 psig or In Hg up to 30 In Hg or 100 psig or 250 psig (depending on which type of transducer is used).

Compact unit

Requires minimal wall space. Monitors up to 7 gases

Alarm history recall

Can recall previous alarm signals even after the alarm condition has been corrected and the alarm panel has been cleared.

Area Alarm repeat feature

Adjustable from 1 minute to 999 minutes (factory programmed for 10 minutes.

Installation: Mounting

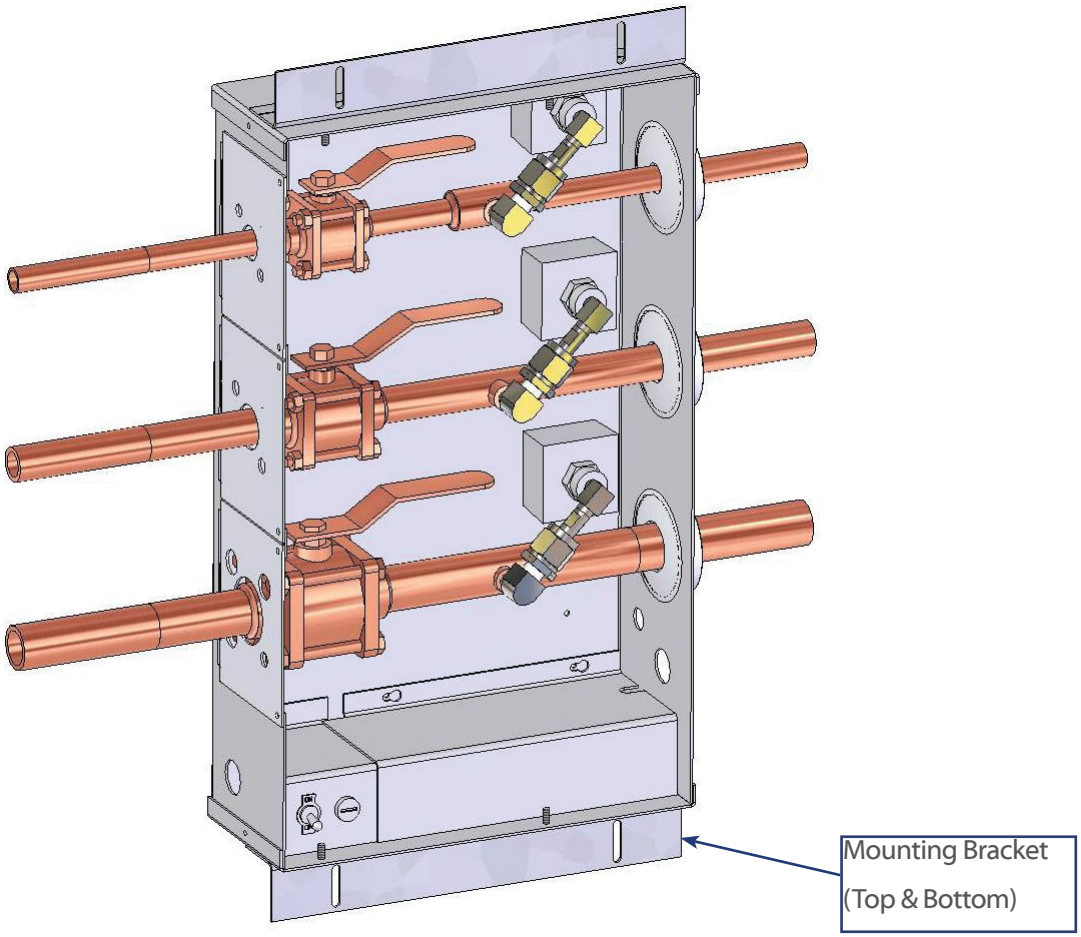

The backbox is designed to fit in a 3-1/2" deep wall cavity. Attach to suitable framing using the top and bottom brackets. Brackets are adjustable to accommodate various drywall thickness.

Installation: Wiring Main Power

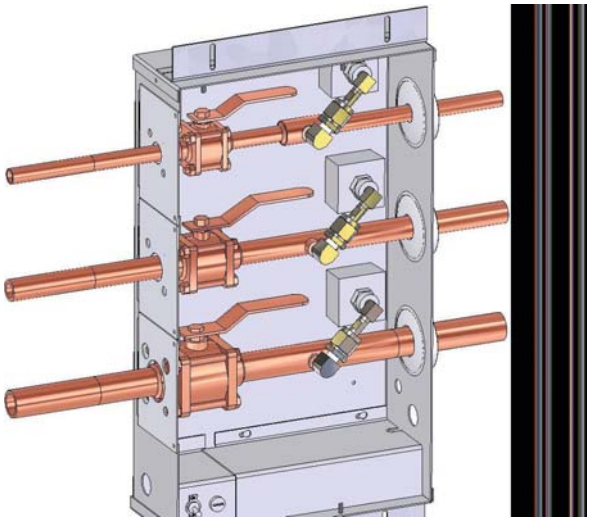

The power supply hole is located in the bottom (left side) of the rough-in box. Make conduit connections for wiring from the facility **emergency power source.** To remove the power supply cover, remove the two screws at the top of the cover. Slide the wiring harness strain relief to the left until it is free from the cover. Remove the single screw at the top of the switch cover.

Use the ½" conduit knock-out provided on the bottom left side of the rough-in box to route conduit to supply either 120 or 240 VAC to the power supply. **Note: Separate conduit should be used for low voltage wires (use knock outs provided on the right side of the box).**

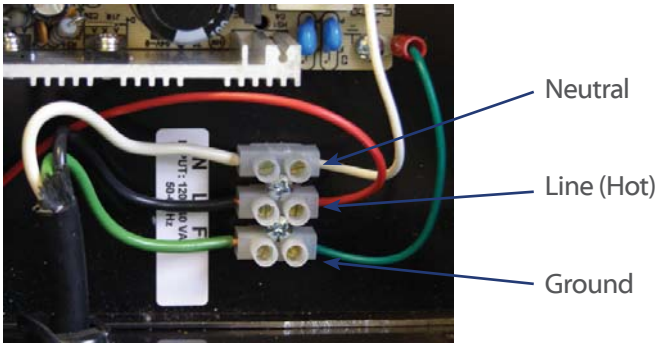

Route wires through the power supply conduit installed in the bottom and left side of the rough-in box. Connect the 120 or 240 VAC facility **emergency power source** electrical wiring to the terminal strip provided on the lower left side of the box. (N = neutral, L = Line (hot), G = field ground)

Installation: Plumbing

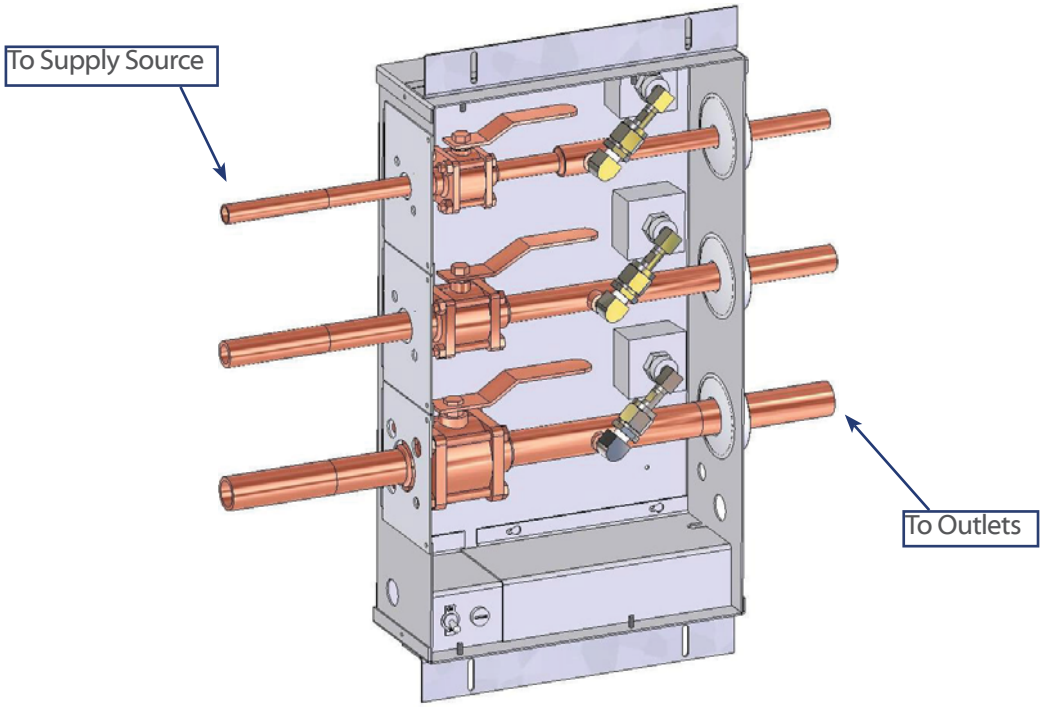

After removing the valve protective plastic caps, connect the piping to the gas piping system per CSA Z7396.1. Make sure the drop is for the proper gas service. Using a purge gas to insure cleanliness in the tubes, silver braze the joints. **Do not use soft solder**. Conduct heat away from the valves. (A purge kit is required for purge equipment connection to the system). The 150 psi (60 psi for vacuum & scavenging standing pressure test of the piping system must be successfully completed and all pressure removed from the system **before** connecting the transducers to the system.

Attaching transducers without depleting the 150 psi or 60 psi standing pressure first will result in damage to the transducers! Opening the check valves in the Medical Vacuum & Scavenging risers without first depleting the 60 psi standing pressure will damage the check valves in the risers!

Installation: Front Panel

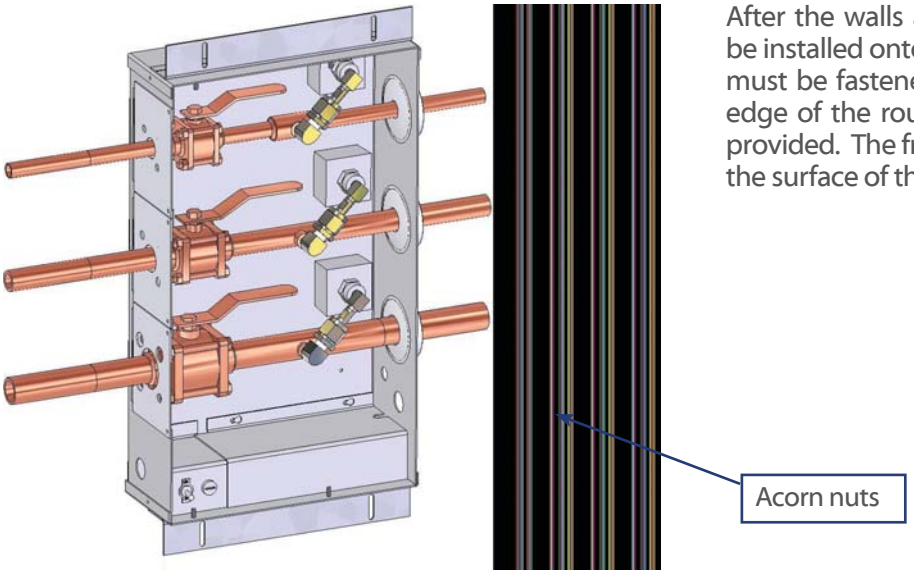

After the walls are finished, the front cover can be installed onto the rough-in box. The two tabs must be fastened to the upper and lower front edge of the rough-in box using the acorn nuts provided. The front cover should rest flat against the surface of the drywall.

Installation: Labeling the Alarm Front

Labels should be added before wiring the alarm front panel. Remove the complete circuit board assembly by unthreading the four nuts shown here from the back of the alarm front panel.

The gas modules are shipped pre-labeled from the factory. If a gas service is changed to a different gas or added to the alarm, it will be necessary to insert the appropriate label in the pocket of the gas module. The new gas label supplied by Class1 Inc. will slide into the gas module label pocket of the gas module label.

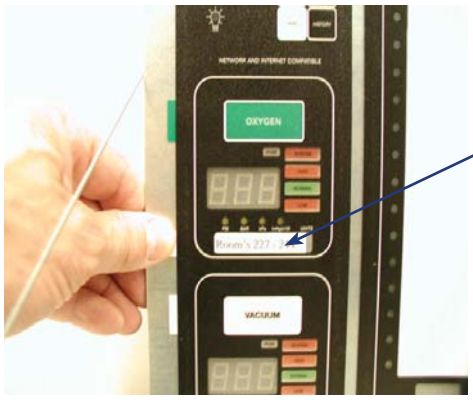

A blank label has been provided at the bottom of each gas module for room identification. You may type directly onto this label or apply a pre-printed label. The label supplied by Class1 Inc. will slide into the gas module label pocket of the gas module label.

Installation: Wiring the Aralm Front Panel to the Power Suppply

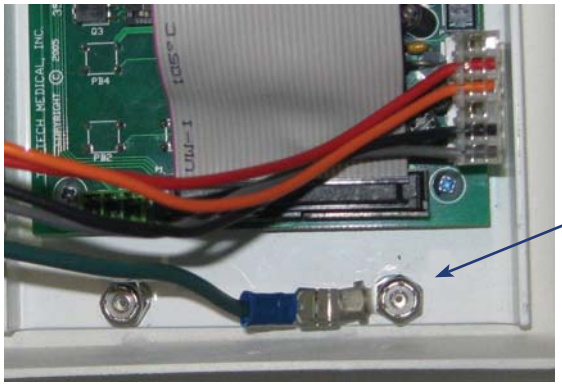

Attach the green ground wire, which is in the wiring harness, to the ground tab on the lower right corner of the front panel

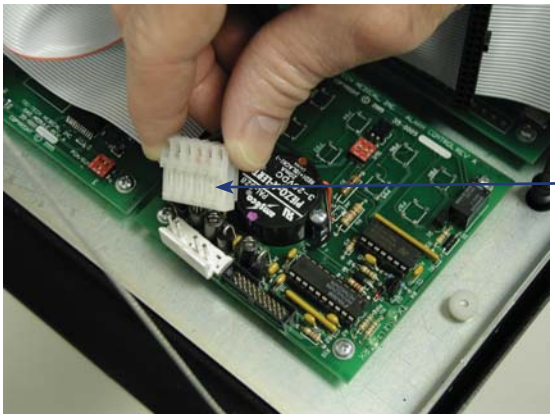

Attach the plug connector at the end of the wiring harness to the appropriate connector located at the lower right corner of the button module circuit board. The plug should lock into place. The plug can only be inserted one way.

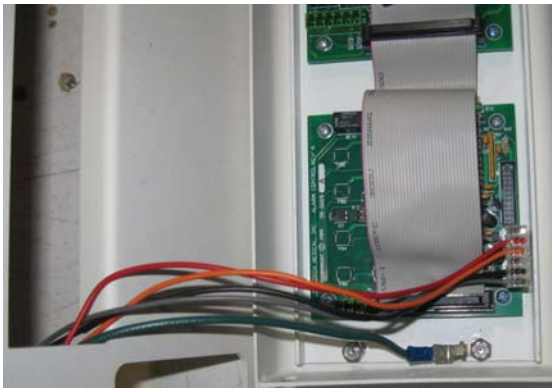

This is how the wiring harness plug connector should look when properly installed on the back of the button module board.

Installation: Transducer Wiring to the Gas Module Circuit Board

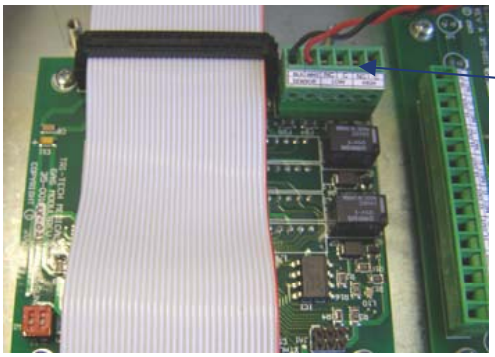

The wire terminal connector on the gas board has a six wire connector. The two wires from the transducer will be pre-wired to the plug connection. Plug the transducer in until it clicks and locks in place

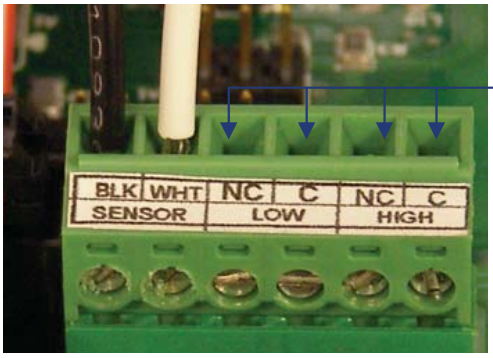

The four connection slots are for optional remote signals of the low and high line pressure alarms.

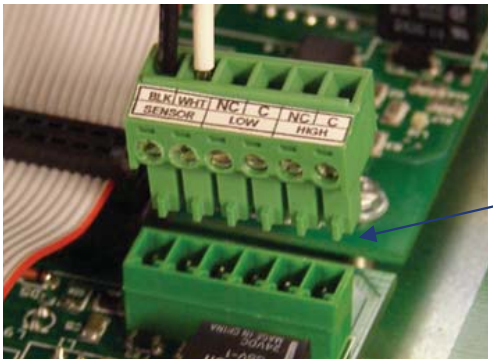

The transducer plug may be removed from the gas module to make it easier to install the wires.

Visually verify that the appropriate transducer has been attached to the appropriate gas module by looking at the front of the alarm panel. If there is ***not*** an Error Condition and a System alarm, the proper (matching gas service) transducer has been connected to the gas board.

Alarm Displays & Function - Component Identification

Button Module Display and Function

Power on Indicator

The power on indicator (green LED) is illuminated whenever electrical power (120 or 240 VAC) is connected to the alarm and the on/off switch is turned on.

Test Button

When the Test button on the front panel is pressed, the alarm illuminates all segments of all lights and LED's and sounds the buzzer.

Alarm Silence

In the event of an alarm condition an audible alarm sounds. The audible alarm can be silenced by pressing the alarm silence button. The high or low pressure LED or the remote signal LED will remain illuminated until the alarm condition is rectified. If a Gas module (area alarm) had alarmed, depressing the silence button will silence the alarm for approximately 10 minutes (factory setting). After approximately 10 minutes, the audible alarm will sound again.

History Button

The History button may be pressed and held at any time to view alarm history. Viewing alarm history is only active while the History button is pressed; releasing the button returns the alarm to normal operation. Pressing the History Button will display the following:

Gas Module - If there was an alarm condition for any gas (area) module, the High and/or Low Pressure LEDs will be illuminated. If both the High and Low Pressure LEDs are illuminated, the gas has had both a High and Low alarm.

Clear Alarm History – To clear alarm History you simply press the History button, hold it down and simultaneously press the Clear button.

↑ (up arrow)

The up arrow may be pressed & held at any time to display the high line pressure alarm set points of the gas module boards. When in the program mode, the up arrow is used to raise the high line pressure alarm set point on gas module boards

↓ (down arrow)

The down arrow may be pressed & held at any time to display the low line pressure alarm set points of the gas module boards. When in the program mode, the down arrow is used to lower the low line pressure alarm set point on gas module boards.

→ (right arrow)

The right arrow may be pressed & held at any time to display the gas service for which the gas module board is currently programmed. When in the program mode, the right arrow is used to toggle between the various options of services on the gas module boards.

← (left arrow)

The left arrow may be pressed & held at any time to display the type of transducer that is connected to each gas module board. The 3 types are 0 – 30 In Hg, 0 – 100 psig and 0 – 250 psig. When the left arrow is pressed "30" will be displayed for a 0 – 30 In Hg transducer, "100" will be displayed for a 0 – 100 psig transducer and "250" will be displayed for a 0 – 250 psig transducer. When in the program mode, the left arrow is used to save the updated programming information. After the changes have been made and the left arrow is pressed three horizontal lines will appear on the digital pressure display of the gas module being programmed.

Gas Module Display and Function

Pressure Reading Display

The LED Digital Pressure Display displays the pressure as indicated by the transducer. The gas pressure may be displayed in PSIG/In Hg, BAR or kPa. PSIG and In Hg is the factory setting.

Note: Vacuum & Scavenging are actually displayed as inches of Hg in the PSI mode. In kPa mode the Nitrogen gas display indicates one tenth of the actual pressure when the pressure exceeds 999 kPa (i.e. 1100 kPa is displayed as 110 and the kPa and (x 10) LED is lit.

Note: Alarm settings are maintained even if power is interrupted.

Units of Measure Indicator

The Units of Measure Indicator illuminates PSIG/In Hg, BAR or kPa (whichever is selected during programming – PSIG and In Hg is factory setting) providing the unit of measure displayed on the LED pressure reading. In the kPa mode the Nitrogen gas display indicates one tenth of the actual pressure when the pressure exceeds 999 kPa (i.e. 1100 kPa is displayed as 110 and the kPa and (x 10) LED is illuminated).

High / Normal / Low Status Lights

Should the line pressure of a gas exceed the programmed alarm set points for low or high line pressure, the corresponding low or high line pressure LED will be illuminated simultaneously with the buzzer sounding to announce an alarm condition has occurred. When the line pressure is neither high nor low it is considered within the normal range and the green Normal LED is illuminated. These indications are relative to the high and low pressure set points which have been programmed into the alarm. These high and low set points should be set in accordance with CSA Z7396.1 at ± 20% of the normal operating pressure.

System LED

The System LED illuminates in the event of a system problem or malfunction. The following codes will be displayed when a System Error or Failure is detected, or when the History button is pressed:

Code	Error
0	No error (History only)
1	Flash EE corrupt, defaults loaded
2	Sensor: open or broken line
3	Sensor: com timeout, data not received when expected
4	Sensor: Noise on line, or data errors
5	Sensor: Gas type/range mismatch
Actual low psig	Low pressure (History only)
Actual high psig	High pressure (History only)

Program Mode

When a circuit board is placed in the program mode (see Programming Modules – page 17) the board may be re-programmed. The brightness level of the circuit boards other than the one in the program mode is decreased. On Gas Displays Modules the PGM (Program) LED is illuminated.

Alarm Operation

This section deals with the daily operational aspects of the alarm panel. The *Programming the Alarm* section covers the procedures to follow in order to configure the alarm if the preprogrammed settings are not appropriate, a module is added or deleted or if the alarm is being incorporated into a T-Net system. After installation has been completed and the alarm has been properly configured, it is ready for operation.

Gas Modules

With the electrical power applied to the alarm and the gas systems adequately pressurized, the following indicators are illuminated: 1) the Power On LED, 2) the pressure readings of the gas on each gas display, 3) the Normal LED (green) on each gas display.

If the pressure of one of the gases drops below the programmed low limit setting, the following events take place simultaneously: 1) the Normal LED will be extinguished, 2) the Pressure Low LED (red) will illuminate, 3) an audible alarm will sound.

If the pressure of one of the gases rises above the programmed high limit setting, the following events take place simultaneously: 1) the Normal LED will be extinguished, 2) the Pressure High LED (red) will illuminate, 3) an audible alarm will sound.

Testing the Alarm

Pressing and holding the **Test** button initiates a self-test of the alarm. All LED's and seven segment displays will illuminate for as long as the Test button is depressed. In addition the buzzer will sound. If any LED or seven segment display does not illuminate – it is faulty and the circuit board should be replaced. If the buzzer does not sound, it is faulty and the circuit board should be replaced.

Silencing the Alarm

Press the **Silence** button when the alarm is sounding and the alarm will be silenced.

The area alarm is equipped with a **Repeater Delay** feature which monitors only the Gas Module (Area) alarms. The Repeater Delay has been factory programmed to make the alarm re-sound every 10 (ten) minutes as long as the alarm condition exists.

Note: The alarms are programmed to ignore transient signals that are less than 0.7 seconds in duration.

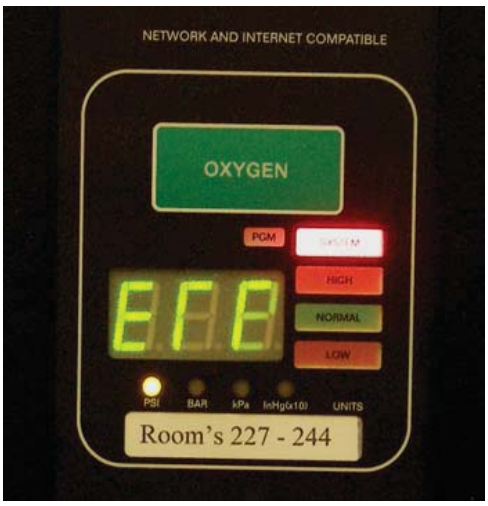

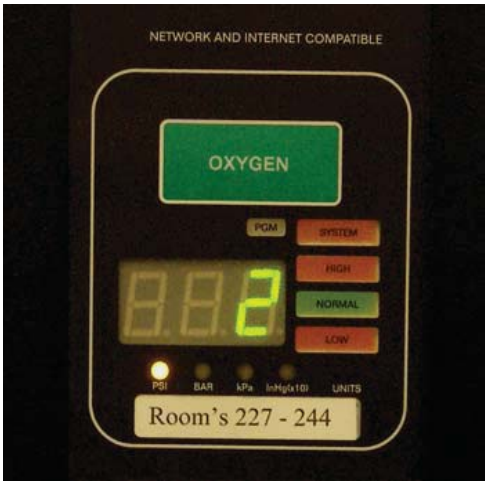

System Alarm

The audible buzzer will sound, the **System** Led will illuminate and an Error Code "Err" will be displayed on the digital pressure display when a system failure occurs or the history button is depressed. The System LED and "Err" will illuminate and flash on and off and alternate with a number (per table below) being displayed on the digital display.

Note: If "Err" should be displayed on the Gas Pressure Display of any gas module, this indicates a problem. Some possible problems and corrective actions are:

- The transducer is not connected to the Gas Module. To correct, check the transducer connection to the back side of the Gas Module.
- A transducer for a different gas service has been connected to the Gas Module. To correct, check the transducer and the Gas Module gas identification labels and make sure they match.
- If the above corrective actions do not correct the problem, contact the factory for assistance.

Code	Error
0	No error (history only)
1	Flash EE corrupt, defaults loaded
2	Sensor: Open or broken line
3	Sensor: Com timeout, data not received when expected.
4	Sensor: Noise on line, or data errors
5	Sensor: Gas type/range mismatch
Actual Pressure	Low pressure (history only)
Actual Pressure	High pressure (history only)

PGM notification

The **PGM** (program mode) LED will flash off & on when a gas module circuit board is manually placed in the program mode. ***It is important to note that while a gas module is in the program mode, it is not monitoring the medical gas pipeline.*** See the "Programming the Alarm" section of this manual for instructions on programming the gas module.

Programming the Alarm

Button Label

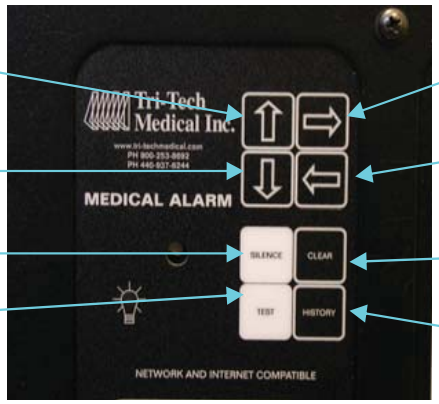

Up button

Down button

Silence button

Test button

Toggle button

Save button

Clear button

History button

Gas Board (back view – showing dip switch

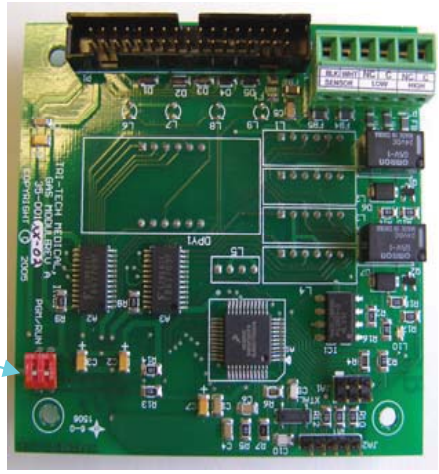

DIP Switch PGM/RUN
(Only outer switch labeled PGM/RUN should be used)

Gas Board

Program mode indicator

Digital pressure display

Units of measure LEDs

SYSTEM LED

HIGH Line Pressure LED

NORMAL Line Pressure LED

LOW Line Pressure LED

Programming the Alarm

The alarm has been programmed at the factory prior to shipment. Programming of the alarm may be necessary if:

- the high or low pressure limits for a gas need to be modified
- if a future gas module is being put into service for an added gas service
- if a gas service is being deleted
- if a gas service is being changed
- if the alarm identification number needs to be changed
- you wish to change the repeater delay time
- you wish to change the units of measure from psig and In Hg to either BAR or kPa
- the alarm panel is being set up on the T-Net system

Note: Only authorized personnel should program the alarm! It is important to note that while the alarm is in the program mode, it is **not** monitoring the medical gas system and alarm conditions will **not** trigger an alarm.

Accessing the Alarm Program Mode

To program the alarm, the circuit boards must be placed individually, one at a time in the program mode. To place a circuit board in the programming mode, the dip switch located on the back side of the circuit board to be re-programmed must be changed from the "run" to the "pgm" position.

After this is done, the gas module (area) board being reprogrammed will be brighter than the rest of the gas module (area) boards (when viewed from the front) and the yellow "PGM" LED indicator will be flashing to indicate that the alarm is in the program mode and the board which is illuminated more brightly and has the flashing "PGM" LED is ready to be reprogrammed.

The programming buttons, located on the front of the alarm, upper left corner (see photo on page 17) may now to be used to make the needed program changes.

When you have successfully accessed the program mode, it is important to note that some of the buttons revert to their sub-functions:

When programming a gas (area) module:

The UP key ↑ is used to raise the pressure set point and / or to toggle upward thru the list of sub- options.

The DOWN key ↓ is used to lower the pressure set point and / or to toggle downward thru the list of sub-options.

The RIGHT key → is used to toggle (scroll) thru the list of major options.

The LEFT key ← is used to SAVE the new programming options after they are selected.

Note: *In order to perform any of the following programming features you must first set the alarm in the program mode.*

Programming the High & Low Gas Pressure set points

Immediately upon entering a gas module (area) board in the program mode, the high line pressure set point major option is displayed. If the gas module being programmed is a typical 50 psig delivery pressure gas, the board has been pre-programmed at the factory with the high line pressure set point at 60 psig, so the display should show the number 60. If you wish to raise or lower this setting, simply use the up ↑ or down ↓ keys to adjust the pressure setting. After the setting has been changed to the new desired setting, press the LEFT key ← (SAVE) to save the new setting. Note: if the SAVE ← LEFT key is not pressed after making the change to the programming and before pressing any other keys, the new setting will not be saved and the alarm will revert to the previously saved setting(s). When the SAVE key ← is depressed, three horizontal dashes will appear in the display.

Press the → key to move on to the low line pressure and repeat the above procedure.
Note: The alarm is designed with a safety feature so that the high and low set points must be at least 0.5 (psig / in Hg), 0.05 (bar) or 5 (kPa) increments apart. The high set point will not be able to be set below the low set point and visa versa.

Programming the Gas Alarm Repeater Delay

After placing a gas board in the program mode, press → until "dLY" is displayed on the digital display of the gas module then let go of the → key. A number will be displayed on the digital display. This number is the setting (in minutes) of the repeater delay. Using the ↑ or ↓ keys, adjust the repeater delay to the desired length of time (0 – 999 minutes). (Note: the repeater delay is pre-programmed from the factory at 10 minutes – per CSA Z7396.1. To save the change and return the alarm to the normal alarm mode, press the ← button, then change the dip switch back to the "run" setting. Note***: this procedure must be repeated for all gas boards on the alarm panel***.

Note: If a value of 0 (zero) is programmed and saved for any board, the repeater is disabled. If left programmed this way after 72 hours, the board(s) will automatically revert back to the pre-programmed factory setting of 10 minutes.

Programming the Units of Measure Displays
While in the program mode, press the → button until "-U-" is displayed on the digital display of the gas module then let go of the → key. The letters "PSI" or "bAR" or " PA" will be displayed on the digital display. This is the unit setting that the gas board is set to display. If you wish to alter the unit display, use the↑ or ↓ keys to select the desired unit display, then press the ← SAVE key. Note***: this procedure must be repeated for all gas boards on the alarm panel***.

Note: Vacuum & Scavenging Gas Modules will automatically display in in/Hg when PSI is selected.

Note: The kPa and x10 LED's will both illuminate on all high delivery pressure Gas Modules (i.e. – Nitrogen and High Pressure Air) when kPa is selected. Because the Gas Pressure LED Display is only able to display three digits and high delivery pressures viewed in kPa are four digits, the Gas Pressure LED must be read as a four digit number by multiplying the displayed number by ten. I.E. – the Gas Pressure LED Display is displaying 125 in kPa. The pressure should be read as 1,250 kPa (125 x 10).

Adjusting the Digital Line Pressure
The digital line pressure may be adjusted slightly (per the chart below) by following the simple procedure below. *This can be done by one person at the alarm panel – no need to open/adjust the transducers!*

1. Put the gas module you want to adjust into the PROGRAM MODE.
2. Using the TOGGLE → (right arrow) button go to the CAL mode.
3. Use the UP ↑ ARROW button to increase the pressure reading and the DOWN ↓ ARROW to decrease the pressure reading. The adjusted reading will be displayed as the changes are made.
4. Press the SAVE button ← (left arrow) to save the setting.
5. You can return to the original calibration setting by pressing CLEAR then press the SAVE button ← (left arrow) while at CAL in the PROGRAM MODE. This should be done if a transducer is ever replaced, as the reading offset will be applied to the new transducer readings.

Range of adjustment:
VAC or Scavenging ± 0.5 In hg
100 psig transducers ± 2.5 psig
250 psig transducers ± 6.0 psig

Programming the Board Identification #
Note: This feature is only used when the alarm is used in conjunction with a Class1 Inc. T-Net system.

Note: Each gas circuit board must have a unique Identification Number – no two can share the same number.

After placing a gas board in the program mode, press → until "Cld" is displayed on the digital display of the gas module then let go of the → key. A number will be displayed on the digital display. This number is the board identification # assigned to that circuit board. Using the ↑ or ↓ keys, select the desired board identification #. Use the ← SAVE button when you are finished.

Note: Valid identification numbers are 1 – 999. The alarm is pre-programmed at the factory with 0 (zero) as the zone identification number.

Adding/Removing Modules or Changing the Gas Service of a Gas Board

To remove a gas board from an alarm – you simply need to turn off the power to the alarm panel (using the switch on the outside of the power supply in the back box), unplug the ribbon cable from the board being removed and then turn the power back on. The alarm will automatically reset itself.

Note: The following feature is only used if; an additional gas service is being added to an area alarm, a future gas module is being set up for a new gas service or and existing gas module board is being changed to a different gas service.

The gas boards are pre-programmed for a specific gas service from the factory. After placing a gas board in the program mode, it is possible to change the gas service of the board. The following list cross references the number that is actually displayed on the gas board numeric display with the full names of the gases:

Gas # displayed	Gas service	Transducer type
12	Nitrogen	250
24	Oxygen	100
04	Nitrous oxide	100
08	CO2 or CO2-O2 mix	100
22	Medical Vacuum	30
32	AGSS (Scavenging)	30
16	Medical air	100
06	Helium or Heliox	100
H16	High pressure air	250
H24	Hyperbaric oxygen	100
H08	Medium pressure carbon dioxide	100
SP	Gas mixture	100
HSP	High Pressure gas mix	250
3SP	Tri-Gas	100

Adding T-NET

Class1 Inc. ZVA series alarms may be ordered without T-Net Interface Circuit boards. The T-Net Interface Circuit boards may be installed later.

The toggle switch on the front of the power supply should be placed in the OFF position.

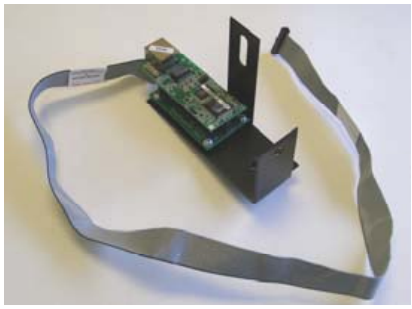

You will be installing one of three types of interface circuit boards, bracket and cable connector; RS485, Ethernet or Wireless. The Ethernet Interface board is shown here left and the Wireless board is shown here right.

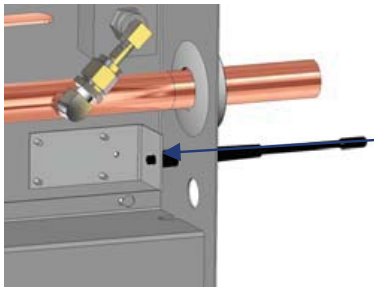

Any of the three types installs into the bottom right corner of the alarm back box. The wireless antenna goes thru a hole in the side of the back box.

The bracket mounts to the existing flange nut.

The cable must be installed into the socket on the Button Board properly – per the instructions on the cable.

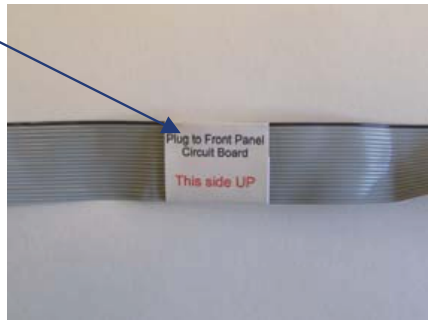

All of the gas boards and remote signal (master boards) will need to be re-programmed with a unique identification number and set up in the T-Net software per the T-Net installation instructions provided with the T-Net software.

The power may now be restored to the alarm. The alarm is fully functional – even if the T-Net software is not yet installed or is out of service.

Appendix A: Glossary of Terms

AC ***Alternating Current***
An electric current that reverses direction or polarity at regular intervals.

DC ***Direct Current***
An electric current that flows in one direction. The current can be steady or pulse.

IN Hg ***Inches of Mercury***
A measurement of the force in a gas vacuum system. 1 IN Hg = 3.38 kPa.

kPa ***Kilopascals***
A measurement of the force in a compressed gas system.
1 kPa = 0.14 PSI

LED ***Light Emitting Diode***
A semiconductor diode that converts applied voltage to light.

NO ***Normally Open***
An electrical circuit in which the switch is normally open. No current flows through the circuit in normal operation. Only when the switch is closed is the flow of current started.

NC ***Normally Closed***
An electrical circuit in which the switch is normally closed. Current flows through the circuit in normal operation. Only when the switch is opened is the flow of current stopped.

PSI ***Pounds per Square Inch***
A measurement of the force in a compressed gas system.
1 PSI = 6.9 kPa

Transducer
A device that converts pressure into an electrical signal.

V ***Voltage***
Voltage is electrical pressure or force. One volt is equal to the difference of electrical potential between two points on a conducting wire carrying a constant current of one ampere when the power dissipated between the points is one watt.

Transient Signal
An intermittent and brief signal that quickly corrects and returns the alarm to a normal operating mode before monitoring personnel can silence the alarm.

Appendix B: Medical Gas Alarm Specifications

Operating Ambient Temperature range: +10C(50F) to +50C(122F)

Storage Temperature: -20C (-4F) to +85C (185F)

AC Input: 120 - 240 volts AC - 50-60 Hz

Input Fuse: 5 amp input AC line fuse protects the input wiring to power supply

Power Consumption: 45W maximum

Pressure Measurement Accuracy:

0-30 inHg transducer +/-1%
Vacuum, Scavenging

0-100 PSIG transducer +/-1%
Oxygen, Nitrous Oxide, Medical Air, Carbon Dioxide

0-250PSIG transducer +/-1%
Nitrogen

Appendix C: Wiring Diagram

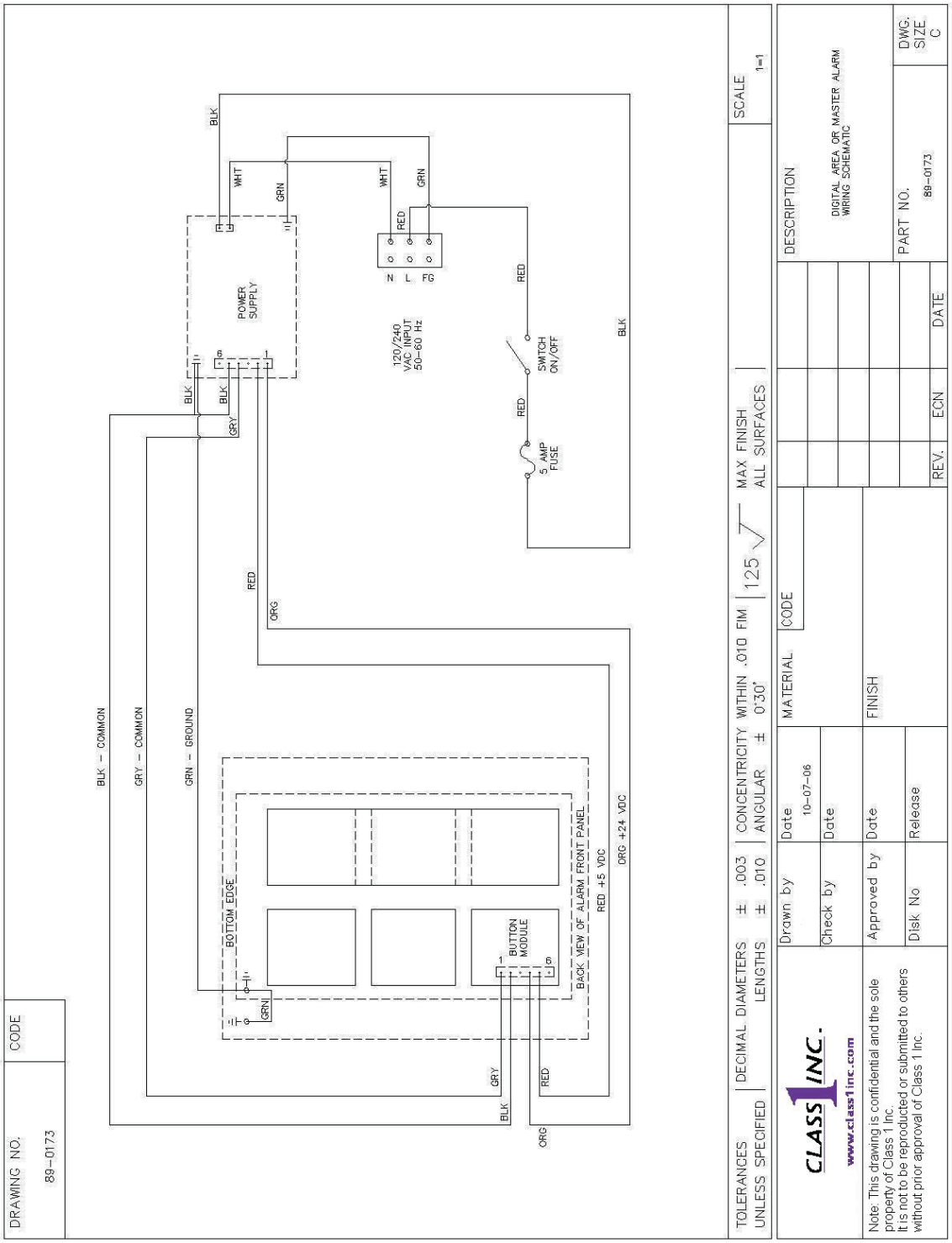

Terms and Warranty

Buyer's purchase order is subject to the following conditions of sale:

Prices and transportation
Seller's published prices, terms of payment, including discounts, and transportation terms in effect at date of shipment of goods, shall apply. Prices are subject to change without notice. All pricing is in Canadian dollars.

Taxes
Liability for all taxes, licenses, or other fees imposed upon the production, sale, shipment, or use of the Seller's products or services covered by this catalog and resulting in quotations shall be assumed and paid for by buyer. If Buyer is a health care facility and a sales tax should be paid, it is Buyer's responsibility to file a Use Tax Return in your province.

Shipment
Delivery will be made F.O.B. Seller's shipping point or Vendor's plant, all risk of loss shall pass to Buyer upon delivery to carrier, and Buyer shall be responsible for obtaining insurance if desired. Seller will ship by carrier selected by Seller unless specified by Buyer in its order.

Payment
Unless otherwise specified, invoices shall be due and payable with thirty (30) days of the invoice date. Payments shall be in Canadian dollars. A 1.5 % per month finance charge will be added to any invoice not paid within terms. A $35.00 bank charge will be added to any returned cheques.

Cancellations and Returns
Order may not be cancelled without the prior written consent of the Seller. Products may not be returned without the prior written consent of the Seller. Transportation charges for returned products will be paid by the Buyer. Cancellation and restocking charges will be assessed to the Buyer where applicable.

Assignment
No rights or obligations arising under any contract between the Seller and Buyer may be assigned or transferred by Buyer without the prior written consent of the Seller.

Patent or Trademark Infringement
If the goods sold hereunder are to be prepared or manufactured, in whole or in part, according to Buyer's specifications, Buyer shall indemnify and hold Seller harmless from an against any and all claims or liabilities with respect to or arising out of actual or alleged patent or trademark infringement on account of such preparation or manufacture and shall, at the option of Seller assume the defense thereof.

Warranty and Remedy
The Seller warrants the products described herein to be free from defects in material and workmanship at the date of shipment. Seller makes no warranty with respect to products manufactured by others and furnished hereunder; provided however, Seller shall extend to Buyer any warranties which it receives from such vendors. NO OTHER WARRANTY, WHETHER EXPRESSED OR IMPLIED, INCLUDING ANY WARRANTY OF MERCHANTABILITY OR FITNESS FOR A PARTICULAR PURPOSE SHALL EXIST IN CONNECTION WITH THE SALE OR USE OF SUCH PRODUCTS.

In the event of breach of any warranty hereunder, Seller's sole and exclusive liability shall be at its option either to repair or to replace F.O.B. point of shipment, any defective product, or to accept return, transportation prepaid, of such product and refund the purchase price; in either case provided that written notice of such defect is given to Seller within twelve (12) months from date of shipment to Buyer, that the product is found by Seller to have been defective at the time of such shipment, that the product has been installed and/or operated in accordance with Seller's instructions, that no repairs, alterations or replacements have been made by others without Seller's written approval and that Buyer notifies Seller in writing within fifteen (15) days after the defect becomes apparent and promptly furnishes full particulars in connection therewith; and provided further that in no event shall the aggregate liability of Seller in connection with breach of any warranty or warranties exceed the purchase price paid for the product purchased hereunder. Seller may, at its option, require the return of any product, transportation and duties prepaid, to establish any claim of defect made by Buyer. Unless otherwise agreed in writing (a) Seller will not accept and shall have no responsibility for products returned without its prior written consent, and (b) Seller will not assume any expense or liability for repairs to products made outside of its plant by third parties. In the event Seller elects to replace a defective product; costs of installation, labor, service, and all other costs to replace the product shall be the responsibility of Buyer.

Seller shall not, except as set forth above, be otherwise liable to Buyer or to any person who shall purchase from Buyer, or use, any products supplied hereunder for damages of any kind, including, but not limited to, indirect, special or consequential damages or loss of production of loss of profits resulting from any cause whatsoever, including, but not limited to, any delay, act, error or omission of Seller.

Minimum billing $100.00

CLASS 1 INC.
Building Better Healthcare™

Class 1Inc.

designs...
manufactures...
and markets...

world class, innovative

medical architectural
mechanical
& electrical
products.

Call us for your next project.